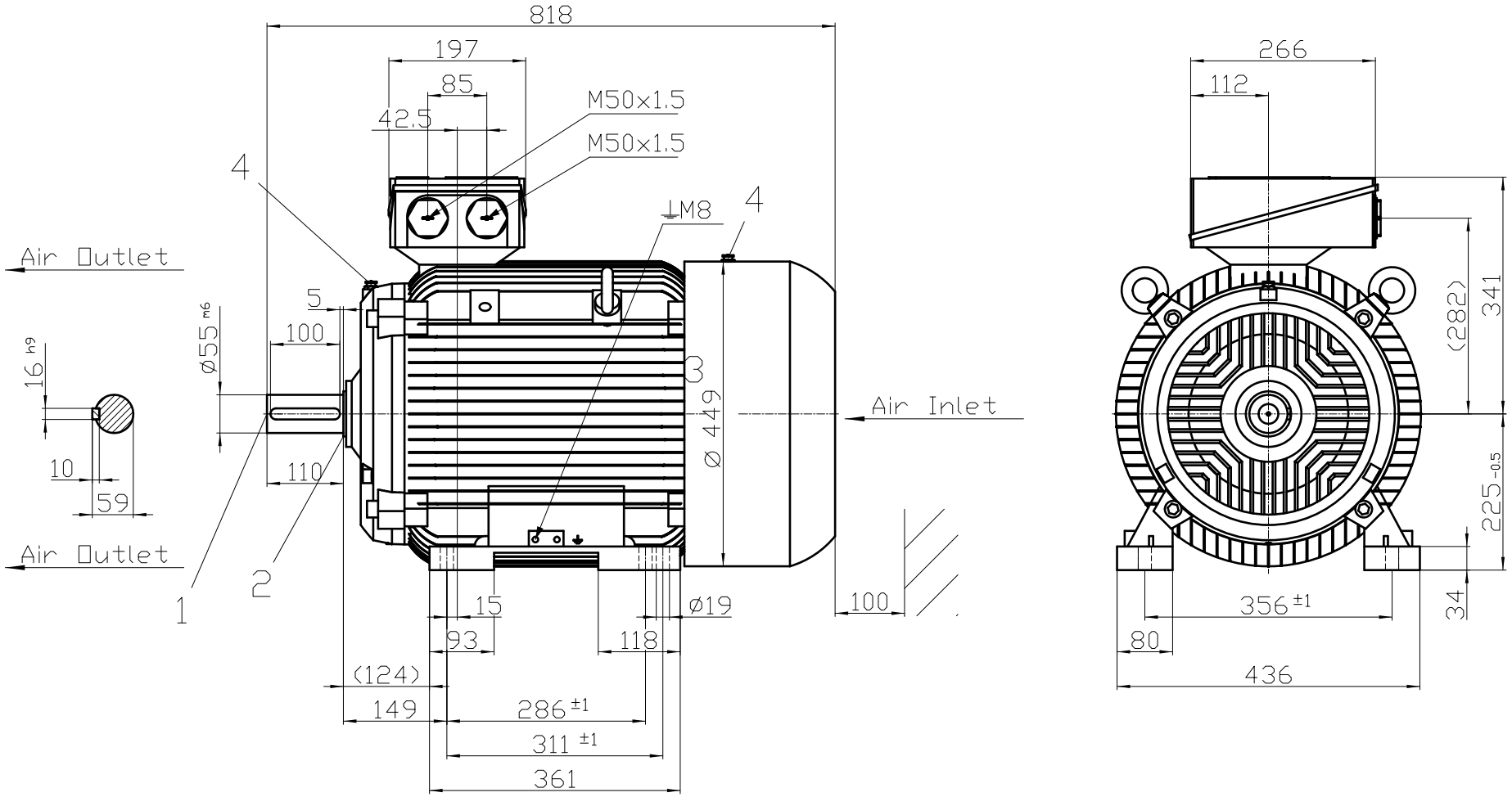

1) Protected centre hole M20x42

2) Relief groove as per DIN509 / IS:3428

3) Measured across screw heads

4) Grease Nipple M10x1 as per DIN3404/IS:4009

Tolerance DIN EN 50347 Untolerated Dimensions- ISO 2768v / IS2102v	Surface	Material	Weight -	Scale mm
FS.:225M; Const.:IMB3 1LE7503-2BA23-5AA4 -	Author Creator DTK Approval Department	Dimensional drawing		
	Change Order	MLFB		Doc Type
SIEMENS	Doc State 9/30/22 Revision Index RS	Item No Doc No		Paper Size A4 Language en
© Siemens AG 2019	Project No -	Ref No -		Sheet 1 of 1

Transmittal, reproduction, dissemination and/or editing of this document as well as utilization of its contents and communication thereof to others without express authorization are prohibited. Offenders will be held liable for payment of damages. All rights created by patent grant or registration of a utility model or design patent are reserved.